Dept / Qty	
DC	1
ED	1
IE	1
ISO	1
PD	1
R&D	1
SD	1
QA	1
QC	1
QE	1

REV.	DESCRIPTION	DRAWN	CHECKED	APPROVED
A	NEW RELEASE	LL 07/06/06'		LJC 07/06/06'
C	DRAWING UPDATE	JLZ 05/04/21'		
D	DRAWING UPDATE	JLZ 03/03/22'		

Female Terminal

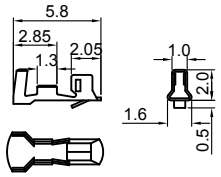

T – DS1069–01 – S C X 0 0

Contact Plating
6: Tin

Female Housing

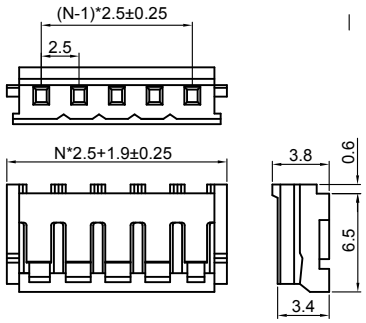

I – DS1069–01 – S C X 0 X

No.of Hole
02~20

Color of Housing
W: White

Male V/T Type

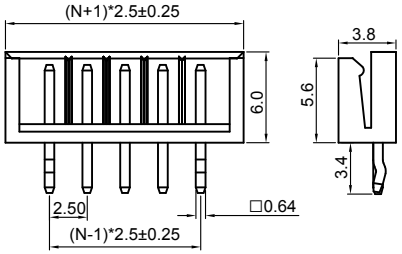

N=No.of contact

Male R/A Type

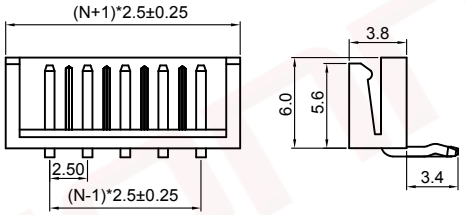

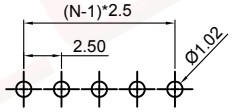

Recommend PCB layout
(Tolerance:±0.05)

Notes:

Specifications:

1. Contact Resistance: 20mΩ Max.
2. Insulation Resistance: 1000MΩ Min.
3. Dielectric Withstanding Voltage: 600V AC(rms) For 1 Minute.
4. Current Rating:3A.
5. Temperature: -25°C~+85°C.

Materials:

1. Contact Material: Copper Alloy.
2. Contact Plating: Tin Plating Over Nickel.
3. Insulator Material: Nylon 66,White.

Wire range: AWG#30~#22

Recommend PC board thickness:1.6mm

Product Number Code:

DS1069–01 – X X X X X

- Contact Plating: 6: Tin 8: Full gold flash
- Housing Color: W: White
- Mounting type: V: V/T type, R: R/A type
- Connector type: M: Male
- No.of contact: 2~20

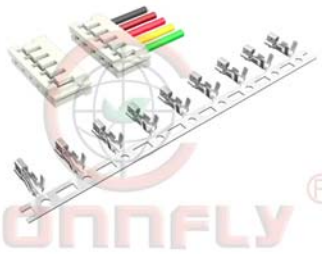

(Series Image-Reference Only)

GENERAL TOLERANCE		ANGLE TOLERANCE	
X.	±0.60	X.	±5°
.X	±0.38	.X	±3°
.XX	±0.25	.XX	±2°

DRAWING TYPE	CUSTOMER		
SCALE	1:1	SHEET	1 OF 1
DRAWING NO.	C–DS1069–01–XXXXX–D		

PROJECTION		TITLE	2.50mm Wafer & Housing EH Type
UNITS	mm		
SHEET SIZE	A4	SERIES	DS1069–01 SERIES

晨翔电子有限公司
CONNFLY ELECTRONIC CO. LTD

The information provided herein is from CONNFLY Electronic Co., Ltd. and is confidential. Any disclosure to a party other than the recipient is prohibited. The intellectual properties and its rights contained herein, including but not limited to, trademarks, patents, copyrights, trade secrets, and technical know-how, are owned exclusively by CONNFLY or its affiliates. Unauthorized use or modification is strictly prohibited without prior written consent from CONNFLY. All intellectual properties provided herein are for reference purposes only and does not constitute authorization of its use in any format or manner. CONNFLY may enforce its intellectual property rights at its own discretion; failures or delays to exercise such rights does not constitute a waiver of such rights.